BILL OF MATERIAL

ITEM	DESCRIPTION	PART NUMBER	QTY
1	CANISTER WELDMENT	K25627–100	1
2	END PLATE	K25627–3	1
3	END PLATE	K25627–4	1
4	3" DIA. DRUM WELDMENT	K25627–5	1
5	UHMW GUSSET	K20217	1
6	#10–32 PHIL. HD. SCREW	9000479	8
7	FLANGE BEARING	9000079–A	1
8	3/8–16 x 1 1/4" HEX. HD. BOLT	9000202–B	2
9	3/8–16 HEX. NUT	9000277	2
10	3/8 FLAT WASHER	9000221	2
11	ELECTRIC MOTOR	9000537	1
12	#10 X 5/8" PAN HD. SCR	7000056	2
13	END PLATE	K25627–6	1
14	ENCLOSURE BOX	9000368–B	1
15	SWITCH (FORWARD, STOP, REVERSE SWITCH)	9000368–C	1

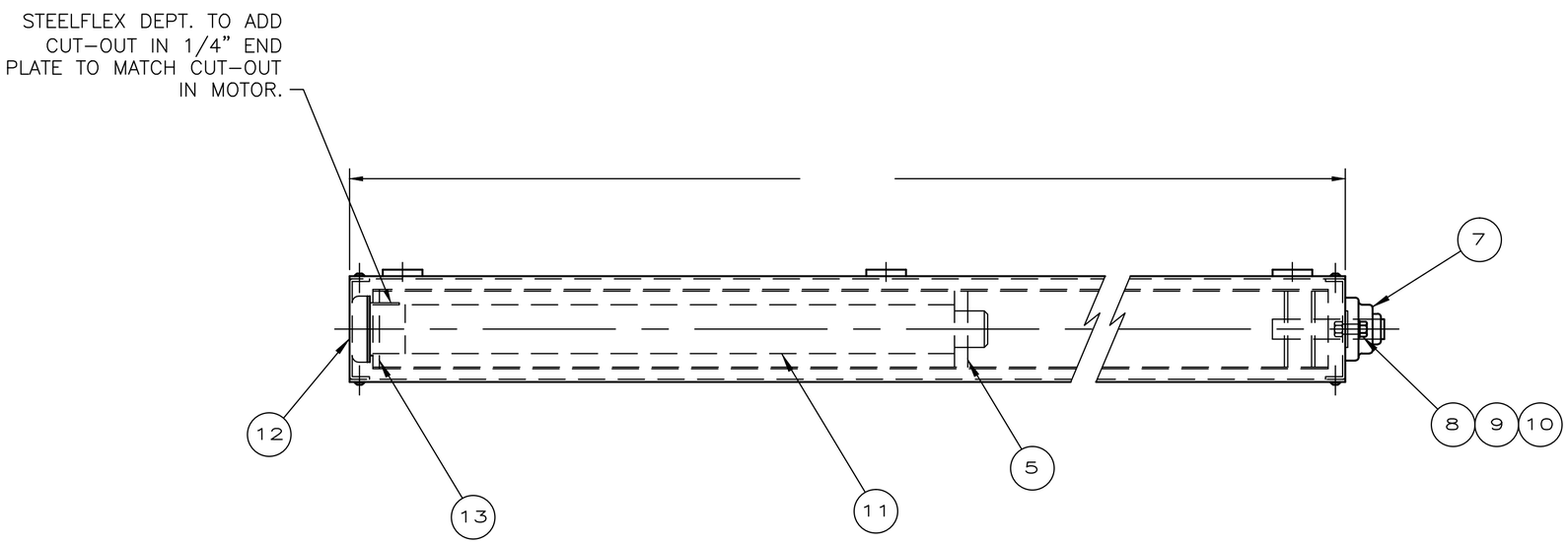

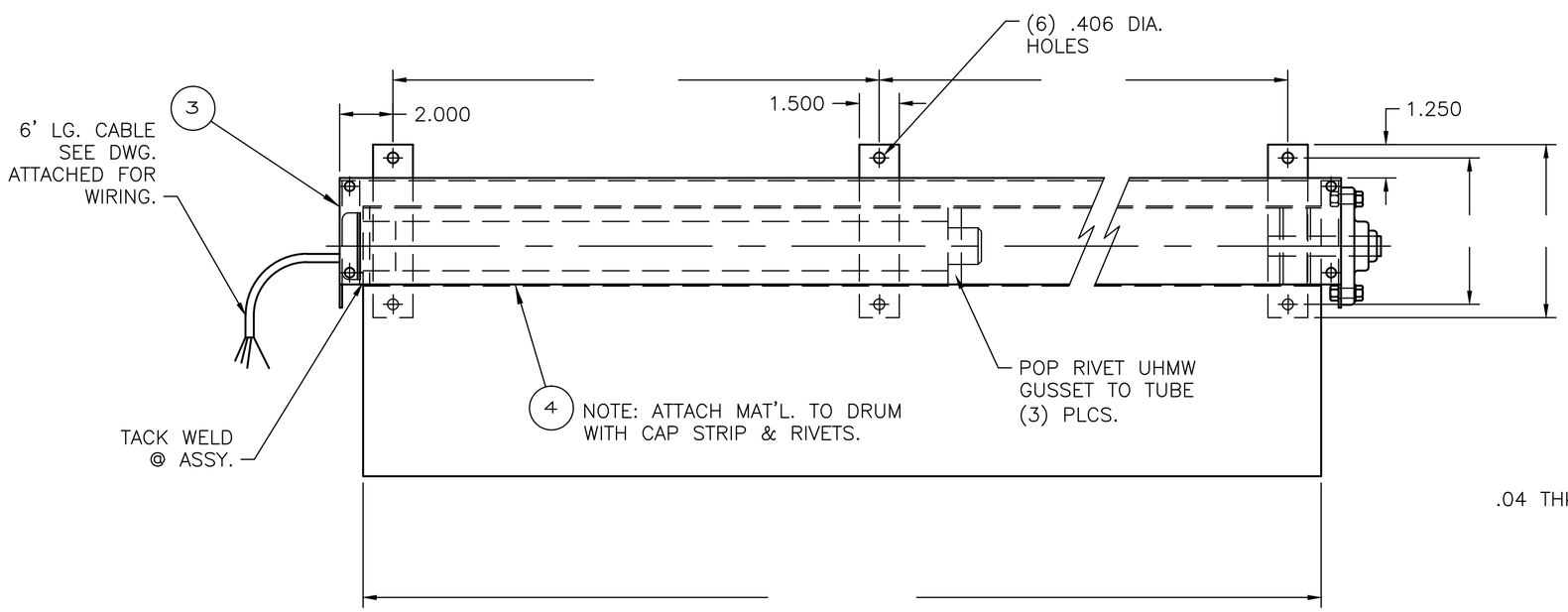

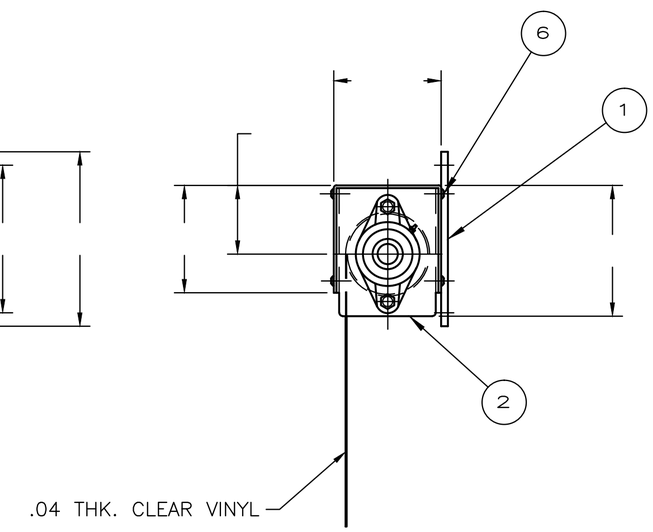

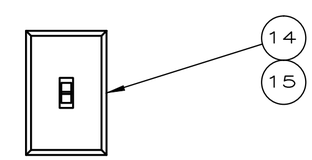

SHIP LOOSE SEE DWG. ATTACHED FOR WIRING.

NOTE:
SHIP LOOSE (1) 3/16" x 3/4" STEEL SHADE BAR #1000171 (SEE CUT LIST)

SOFT PRODUCT MFG. TOLERANCE: UNLESS OTHERWISE SPECIFIED		METAL FABRICATION TOLERANCE: UNLESS OTHERWISE SPECIFIED		MACHINING TOLERANCE: UNLESS OTHERWISE SPECIFIED	
0.0	±0.1	0.0	±0.1	0.0	±0.1
0.00	±0.06	0.00	±0.03	0.00	±0.03
0.000	±0.030	0.000	±0.030	0.000	±0.005
FRACTIONAL	±1/8	FRACTIONAL	±1/32	FRACTIONAL	±1/32
ANGLES	±1 DEGREE	ANGLES	±1 DEGREE	ANGLES	±1 DEGREE

REMOVE ALL SHARP EDGES AND BURRS

DO NOT SCALE

THIRD ANGLE PROJECTION

THIS MATERIAL IS THE EXCLUSIVE PROPERTY OF COLORWAVE GRAPHICS THIS MATERIAL AND INFORMATION ILLUSTRATED OR CONTAINED HEREIN MAY NOT BE REPRODUCED, COPIED, USED OR TRANSMITTED IN WHOLE OR IN PART IN ANY WAY WITHOUT THE PRIOR WRITTEN CONSENT OF COLORWAVE GRAPHICS

SHEET 1 OF 1

A&A NO.	FINISH				
MATERIAL	REF/DETAIL NO				

TITLE

CUST PART NO

CUST PART REV NO

DRAWN BY	CHK'D BY	SHEET SIZE	DRAWING NO.	REV
		C		
DATE		SCALE 1/4"=1"		